30” PRO RANGE FEATURES AND SPECIFICATIONS

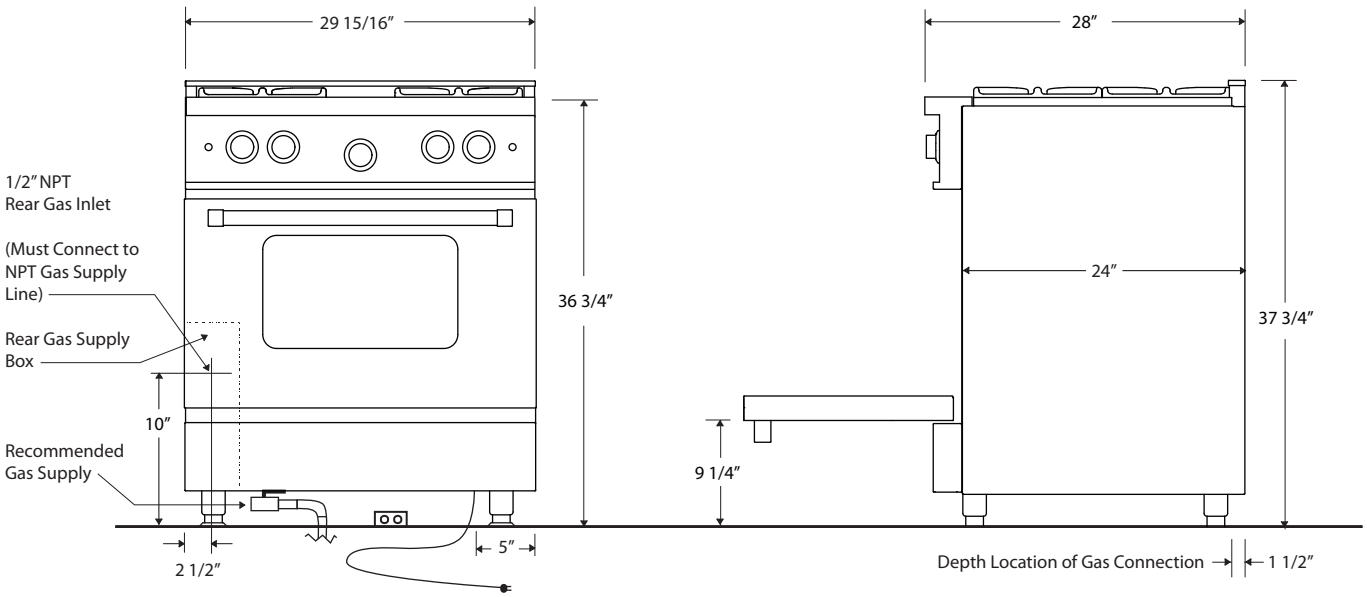

Front Burners	15-18,000 BTU
Back Left Burner (Simmer)	6,000 BTU
Back Right Burner	10,000 BTU
Infrared Broiler Rating	15,000 BTU
Oven Burner Rating	30,000 BTU
Electrical Requirements	120 VAC, 15 Amps,
*(Unit must be on a non-GFI, dedicated outlet)	Single Phase
Operating Gas Pressure	NAT: 5.0” WC
	LP: 10.0” WC
Install Clearance:	0” Side Cabinet
	0” Back Wall
	6” Side Wall

*Easy to clean Sealed Burner Top

*Automatic electronic ignition and re-ignition system

*24” depth for compatibility with standard kitchen cabinetry

*Convection fan

*Full Extension oven rack

*Heavy-duty, commercial stainless steel construction

*1 year parts and labor warranty

OVEN CAPACITY:

The cavity design of the oven provides the most precise temperature control, which delivers even heat distribution resulting in versatile performance. It has the largest oven capacity available on a 30” range and will accommodate a full-size commercial 18“ x 26” baking sheet.

INFRARED BROILER:

Because of its popularity in the commercial market, the direct-fired ceramic infrared broiler is standard on all residential ranges. The large burner produces 1850 F of intense, searing heat close to the burner, while effecting a gentler broiling for foods placed farther away. The broiler is fully recessed into the oven’s top to create maximum cooking space.

FULL MOTION GRATES:

Bring sauce to a boil while stirring on a front burner, then slide it to the rear to simmer while you saute up front! Our full motion grates allow you to easily reposition pots and pans from front to rear burners without lifting. The grates are also oversized to accomodate the largest stock pots and saute pans.

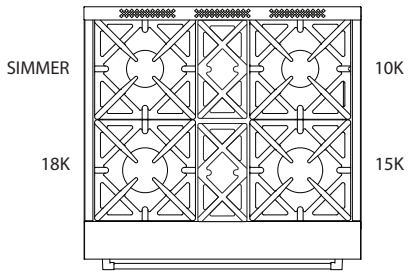

BIG CHILL PRO

P.O. Box 892, Boulder, CO 80306 TOLL FREE: 1-877-842-3269 EMAIL: info@bigchill.com WEB: www.bigchill.com

36” PRO RANGE FEATURES AND SPECIFICATIONS

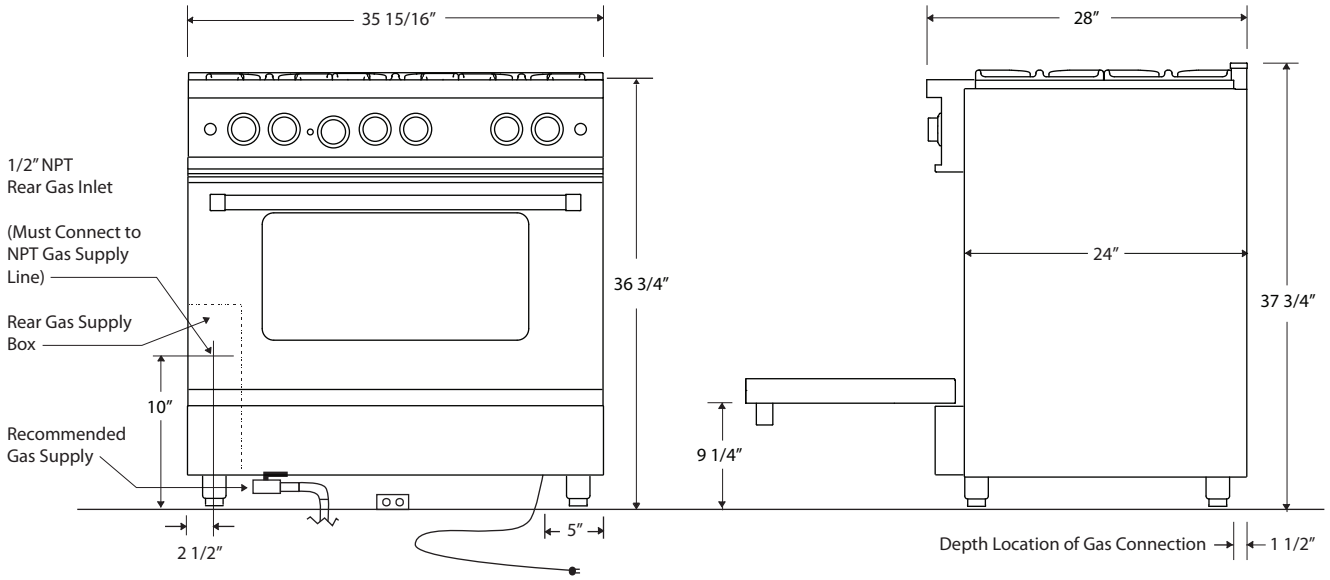

Front Burners	15,000-18,000 BTU
Back Left Burner (Simmer)	6,000 BTU
Back Center / Right Burner	10,000 BTU
Infrared Broiler Rating	15,000 BTU
Oven Burner Rating	30,000 BTU
Electrical Requirements	120 VAC, 15 Amps,
*(Unit must be on a non-GFI, dedicated outlet)	Single Phase
Operating Gas Pressure	NAT: 5.0” WC
	LP: 10.0” WC
Install Clearance:	0” Side Cabinet
	0” Back Wall
	6” Side Wall

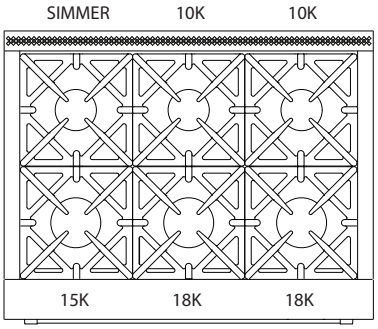

*Easy to clean Sealed Burner Top

*Automatic electronic ignition and re-ignition system

*24” depth for compatibility with standard kitchen cabinetry

*Convection fan

*Full Extension oven rack

*Heavy-duty, commercial stainless steel construction

*1 year parts and labor warranty

OVEN CAPACITY:

The cavity design of the oven provides the most precise temperature control, which delivers even heat distribution resulting in versatile performance. It has the largest oven capacity available on a 30” range and will accommodate a full-size commercial 18“ x 26” baking sheet.

INFRARED BROILER:

Because of its popularity in the commercial market, the direct-fired ceramic infrared broiler is standard on all residential ranges. The large burner produces 1850 F of intense, searing heat close to the burner, while effecting a gentler broiling for foods placed farther away. The broiler is fully recessed into the oven’s top to create maximum cooking space.

FULL MOTION GRATES:

Bring sauce to a boil while stirring on a front burner, then slide it to the rear to simmer while you saute up front! Our full motion grates allow you to easily reposition pots and pans from front to rear burners without lifting. The grates are also oversized to accomodate the largest stock pots and saute pans.

P.O. Box 892, Boulder, CO 80306 TOLL FREE: 1-877-842-3269 EMAIL: info@bigchill.com WEB: www.bigchill.com

48” PRO RANGE FEATURES AND SPECIFICATIONS

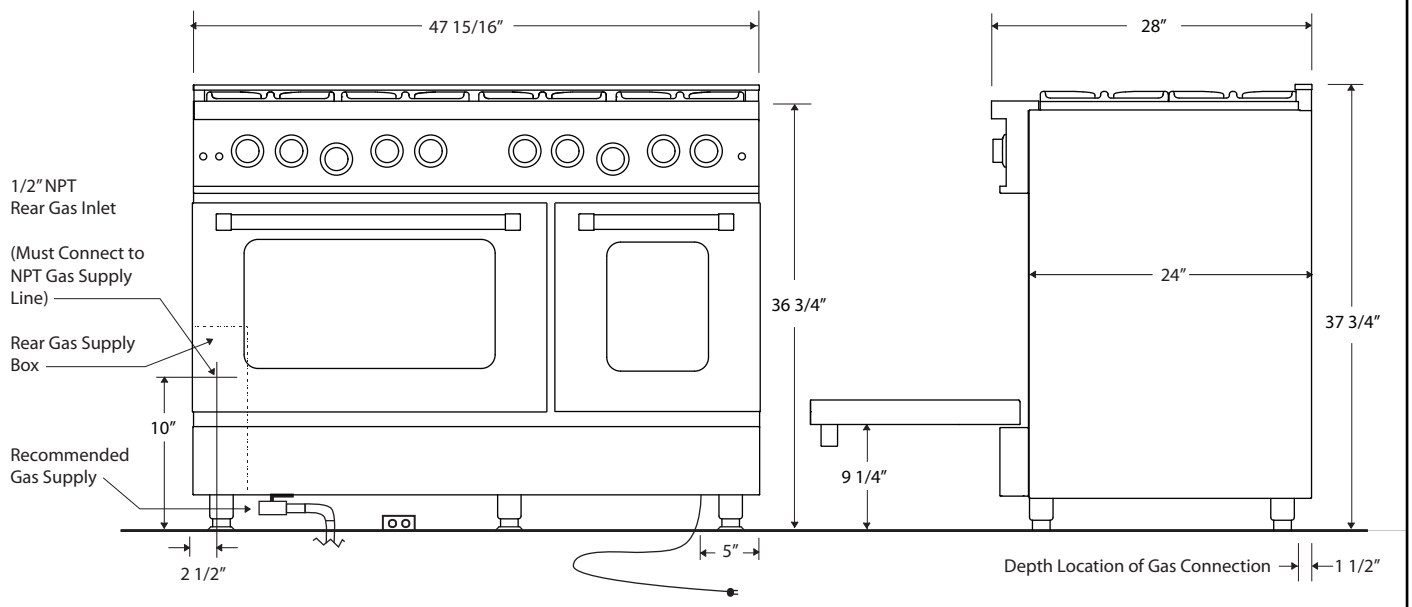

Front Burners	15,000-18,000 BTU
Back Left Burner (Simmer)	6,000 BTU
Back Burners	6,000-10,000 BTU
Infrared Broiler Rating	15,000 BTU
Oven Burner Rating	30,000 BTU
Electrical Requirements	120 VAC, 15 Amps,
*(Unit must be on a non-GFI, dedicated outlet)	Single Phase
Operating Gas Pressure	NAT: 5.0” WC
	LP: 10.0” WC
Install Clearance:	0” Side Cabinet
	0” Back Wall
	6” Side Wall

*Easy to clean Sealed Burner Top
*Automatic electronic ignition and re-ignition system
*24” depth for compatibility with standard kitchen cabinetry
*Convection fan
*Full Extension oven rack
*Heavy-duty, commercial stainless steel construction
*1 year parts and labor warranty

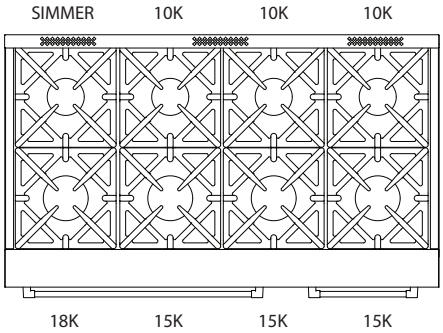

OVEN CAPACITY:

The cavity design of the oven provides the most precise temperature control, which delivers even heat distribution resulting in versatile performance. It has the largest oven capacity available on a 48” range and will accommodate a full-size commercial 18“ x 26” baking sheet.

INFRARED BROILER:

Because of its popularity in the commercial market, the direct-fired ceramic infrared broiler is standard on all residential ranges. The large burner produces 1850 F of intense, searing heat close to the burner, while effecting a gentler broiling for foods placed farther away. The broiler is fully recessed into the oven’s top to create maximum cooking space.

FULL MOTION GRATES:

Bring sauce to a boil while stirring on a front burner, then slide it to the rear to simmer while you saute up front! Our full motion grates allow you to easily reposition pots and pans from front to rear burners without lifting. The grates are also oversized to accomodate the largest stock pots and saute pans.

P.O. Box 892, Boulder, CO 80306 TOLL FREE: 1-877-842-3269 EMAIL: info@bigchill.com WEB: www.bigchill.com